ENGINE-MORPH

2in1

ENGINEERING COMPACTOR FORM

MACHINE LINKAGE

FC9311-4

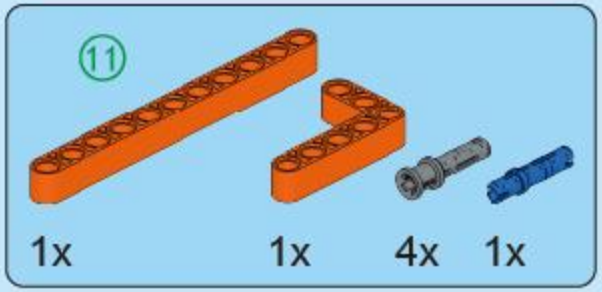

A1

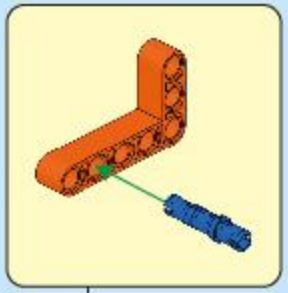

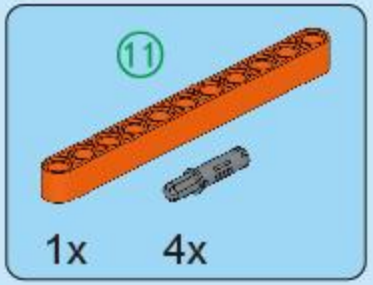

A2

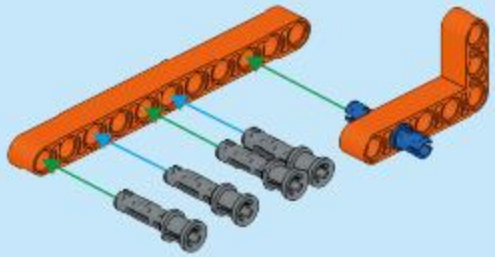

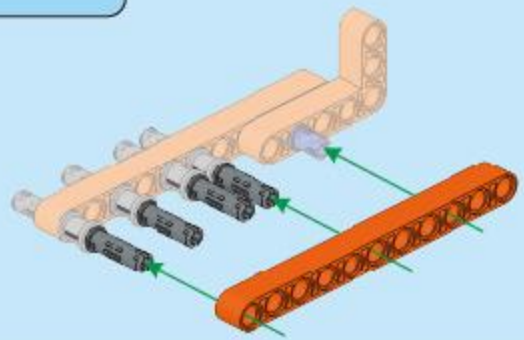

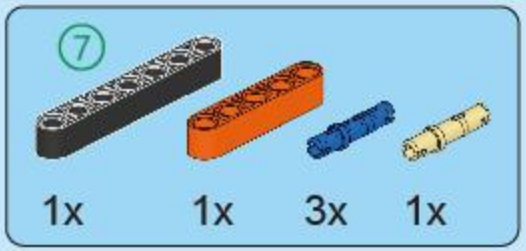

A3

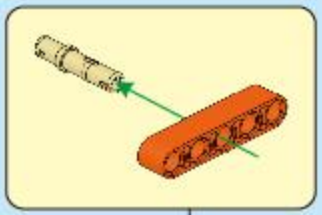

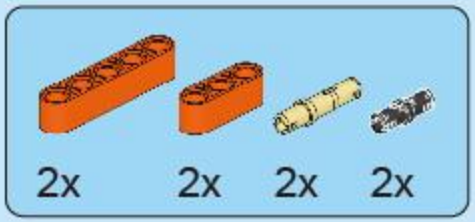

A4

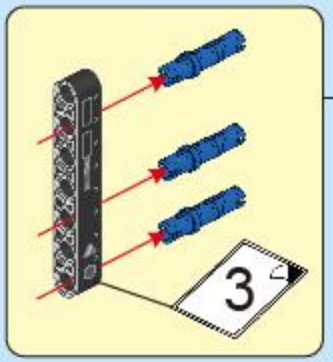

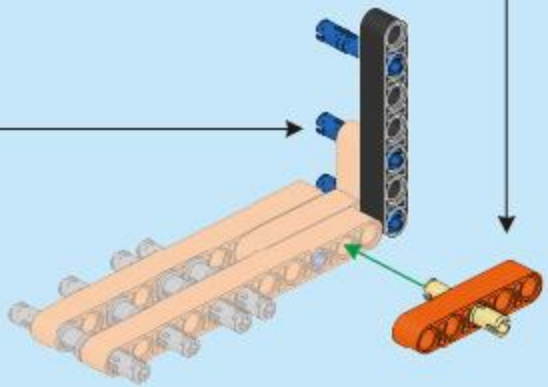

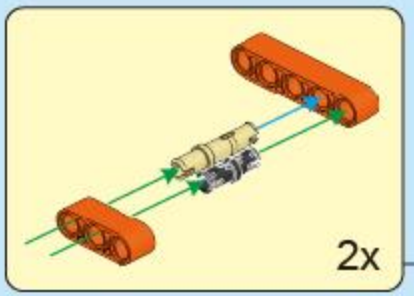

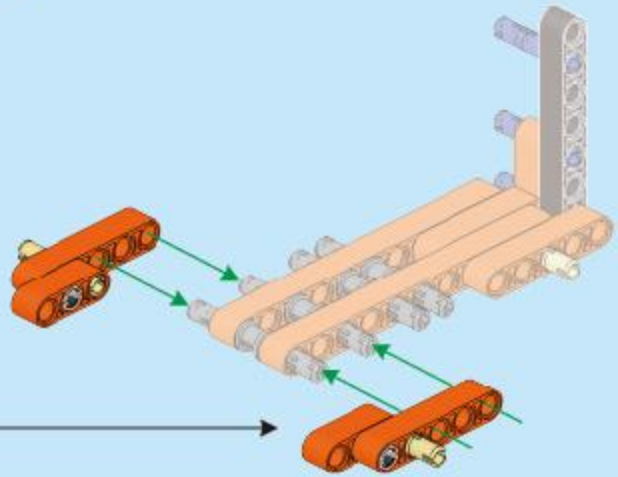

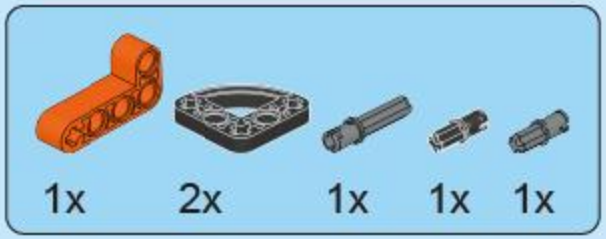

A5

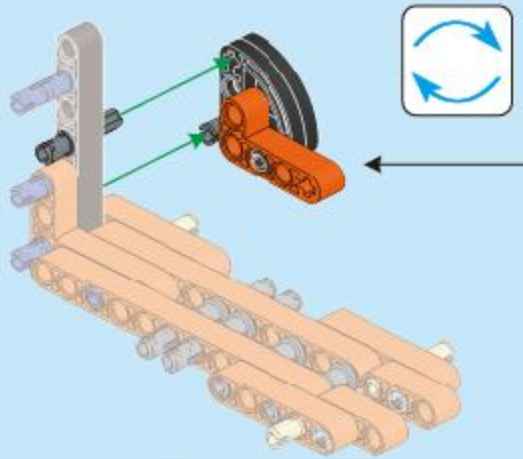

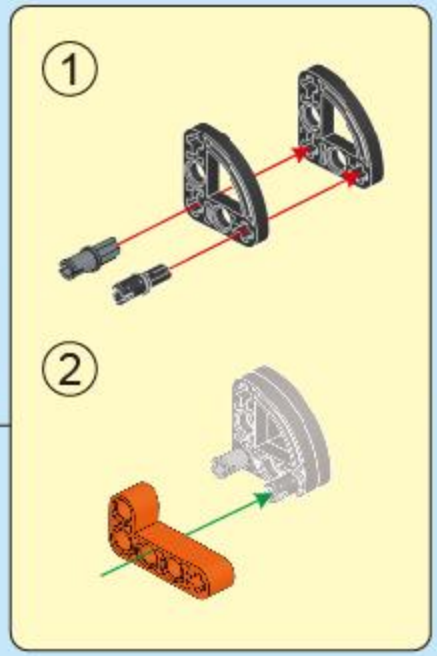

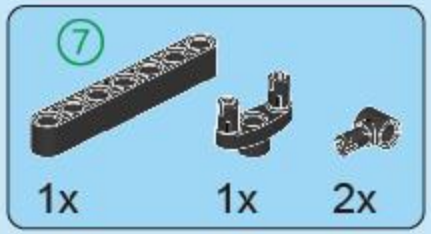

A6

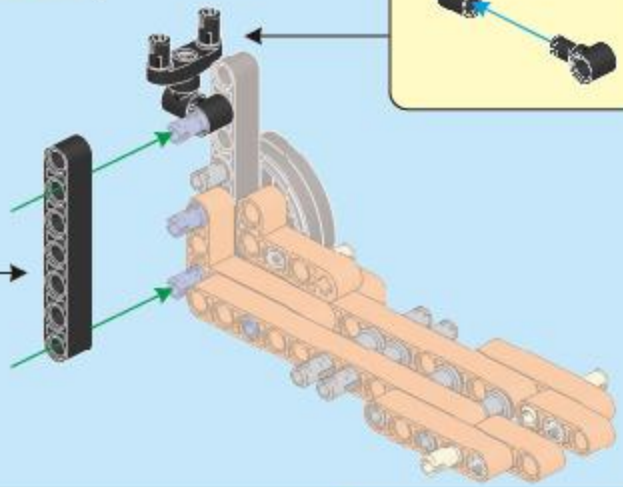

A7

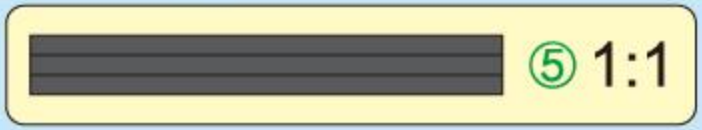

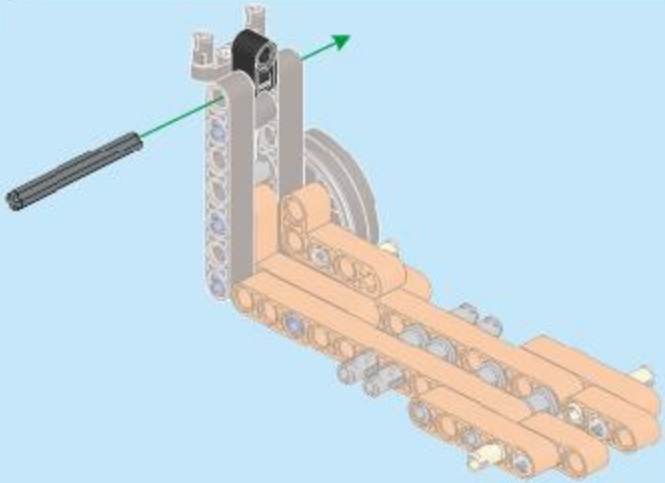

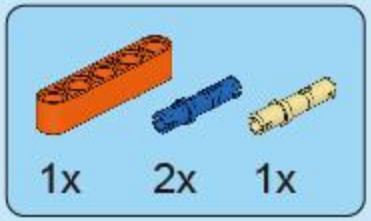

A8

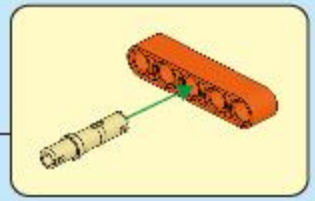

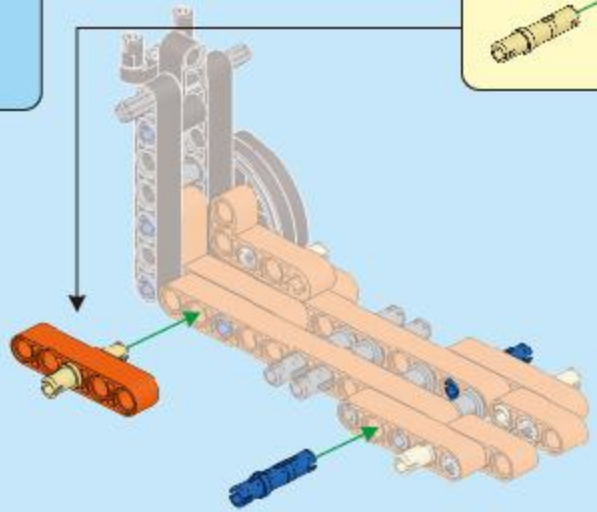

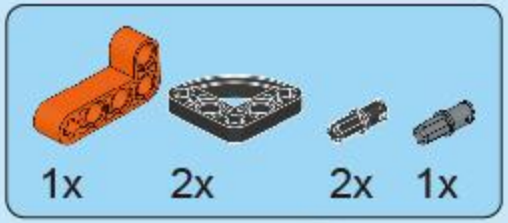

A9

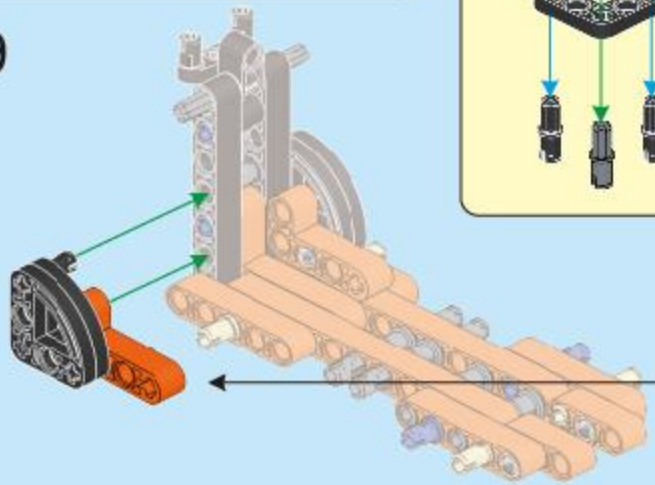

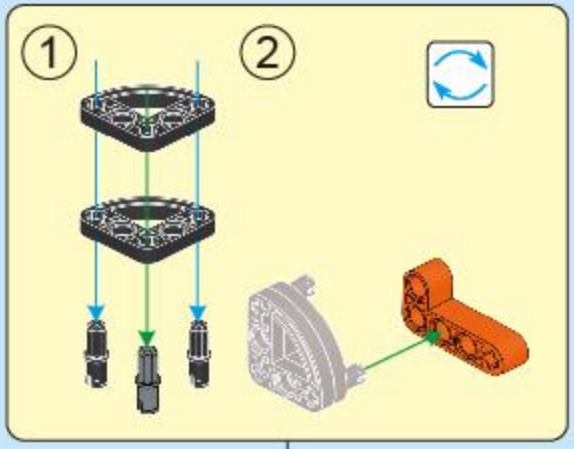

A10

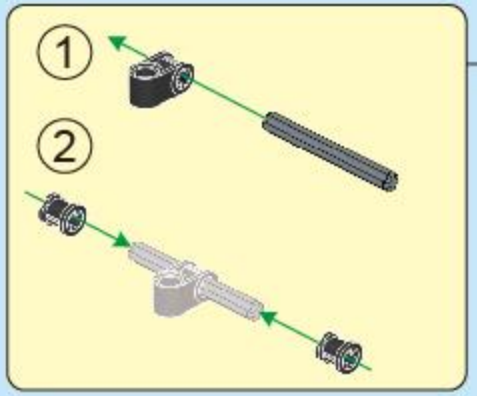

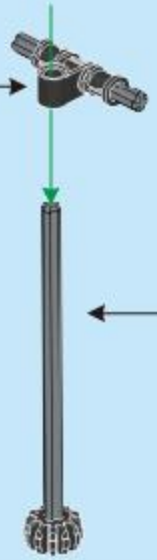

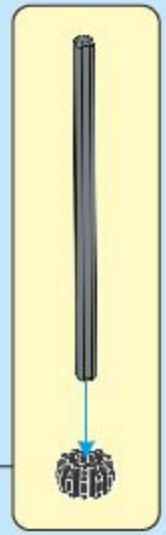

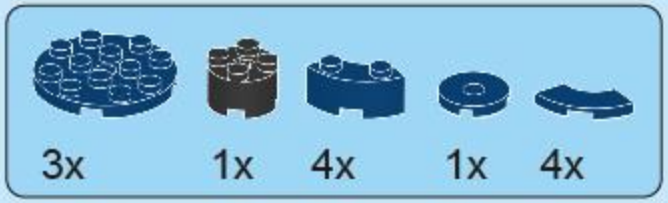

A11

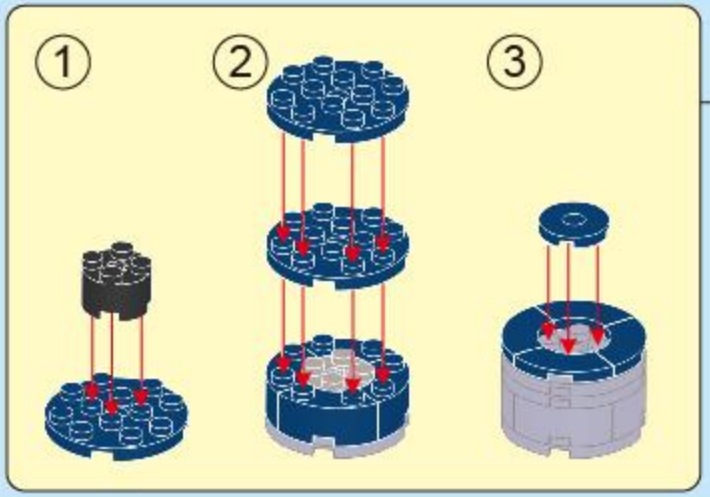

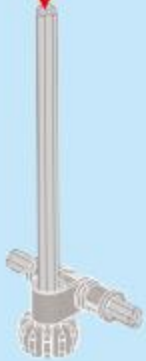

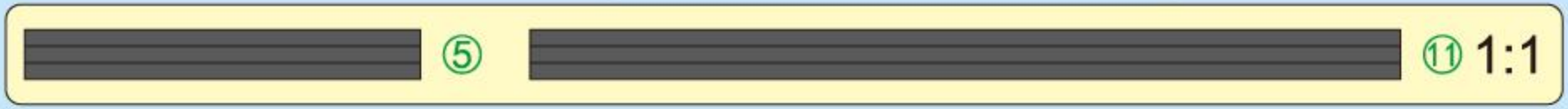

A12

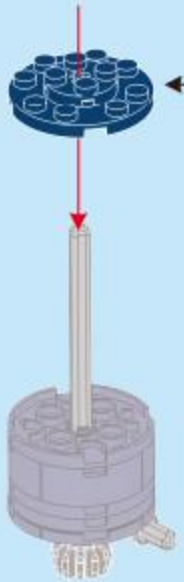

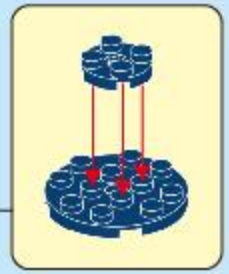

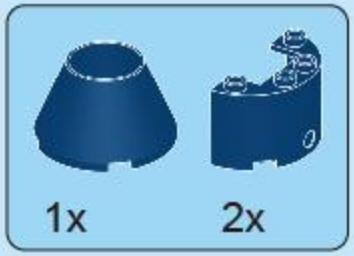

A13

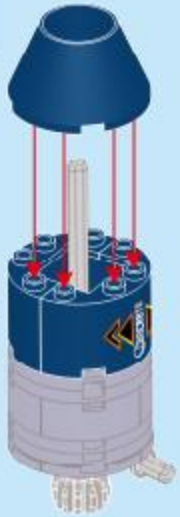

A14

A13

A9

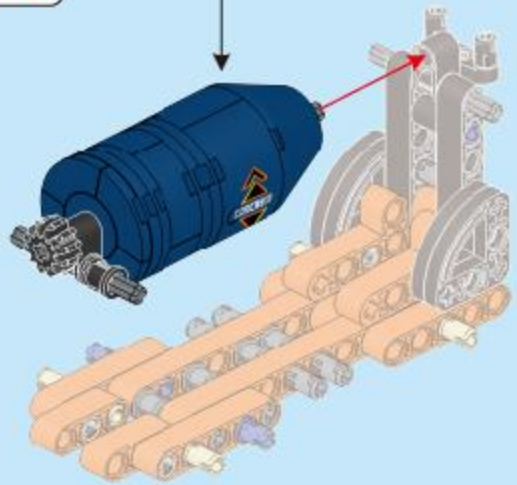

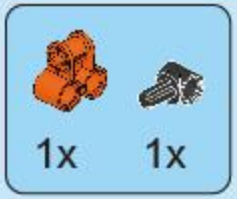

A15

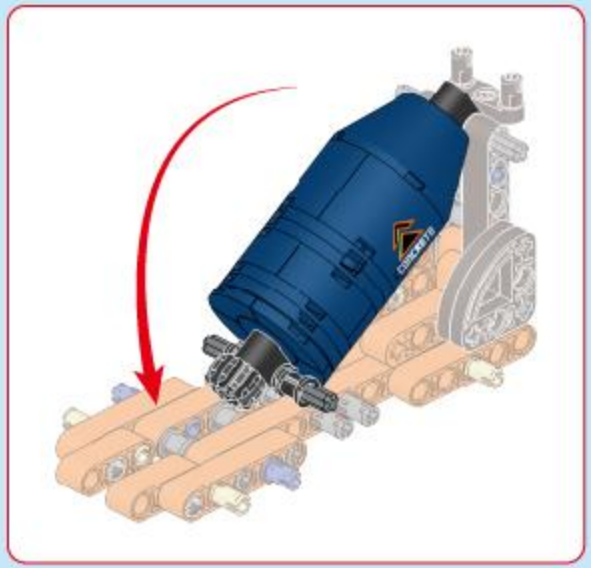

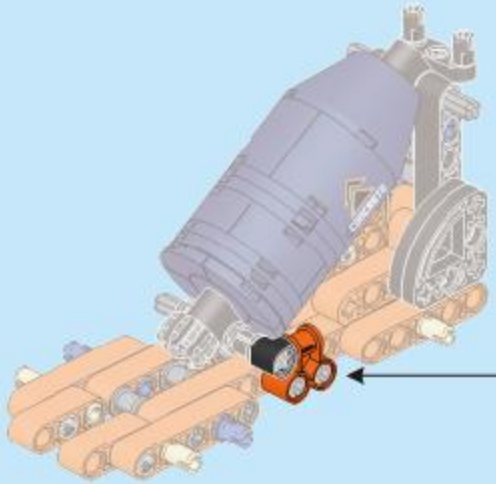

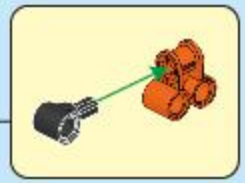

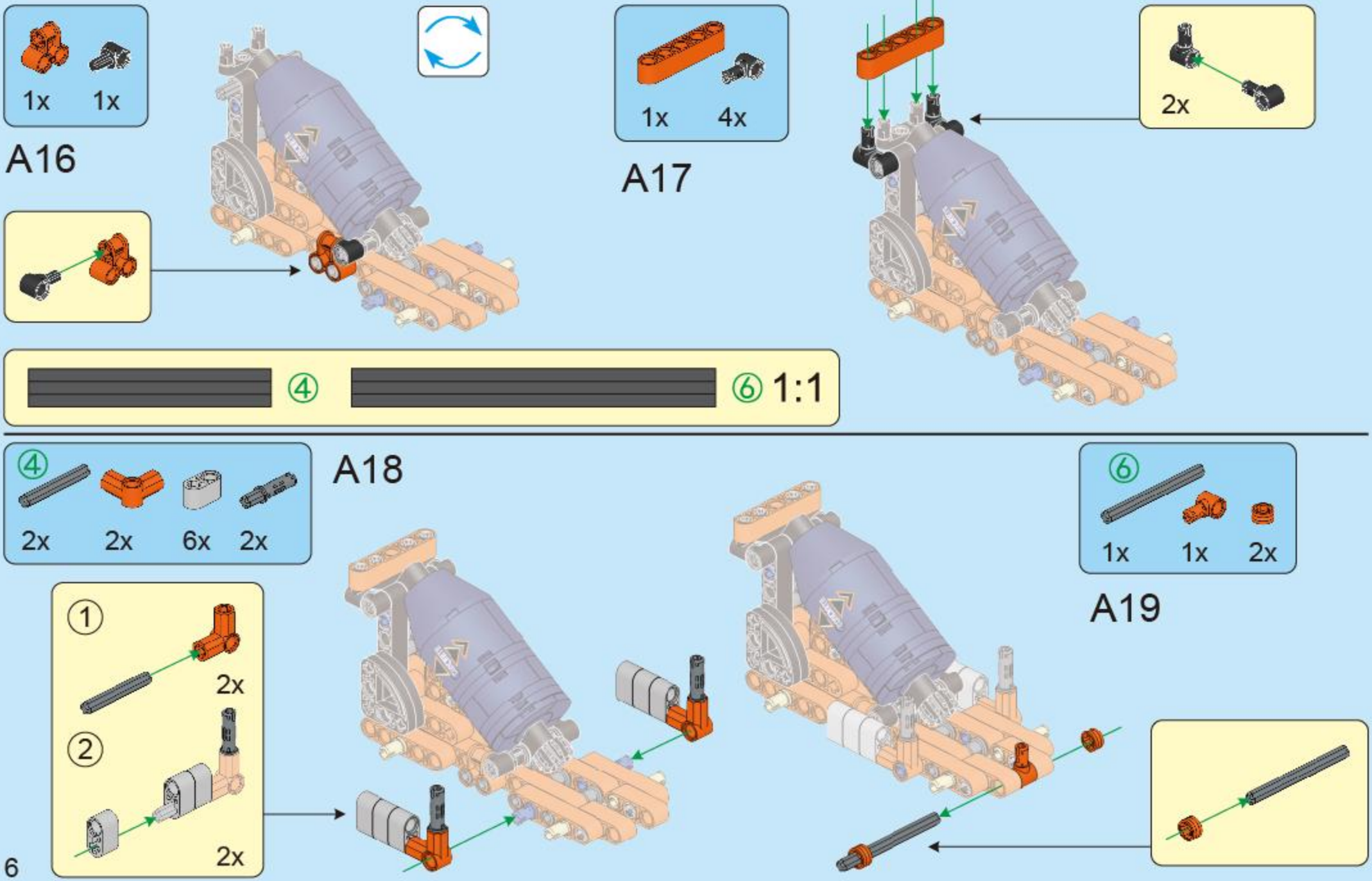
1x
1x
A16
1x
4x
A17
2x
④
⑥ 1:1
④
2x
2x
6x
2x
A18
①
2x
②
2x
⑥
1x
1x
2x
A19

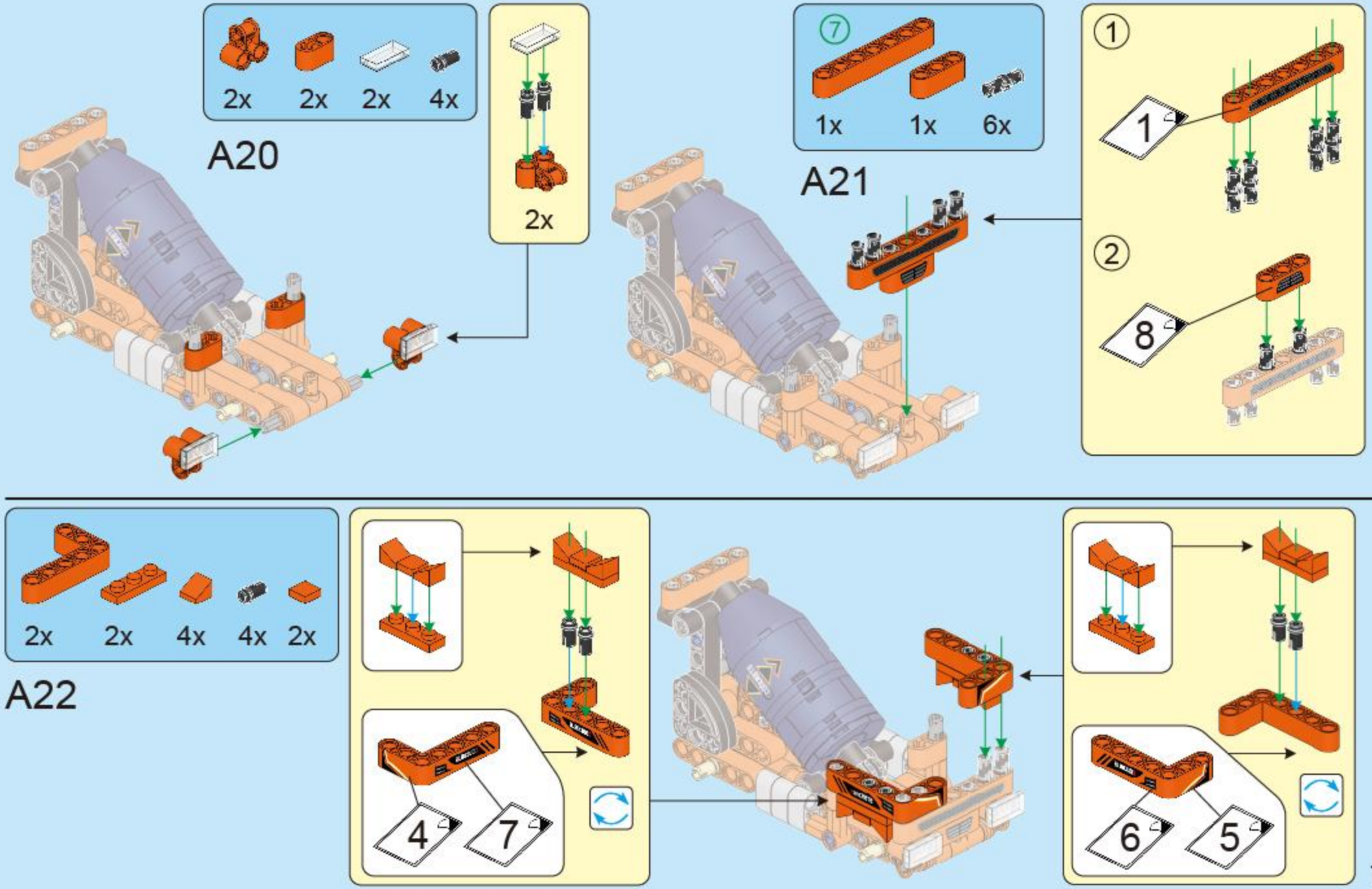
2x
2x
2x
4x
A20
2x
7
1x
1x
6x
A21
1
1
2
8
2x
2x
2x
4x
4x
2x
A22
4
7
6
5

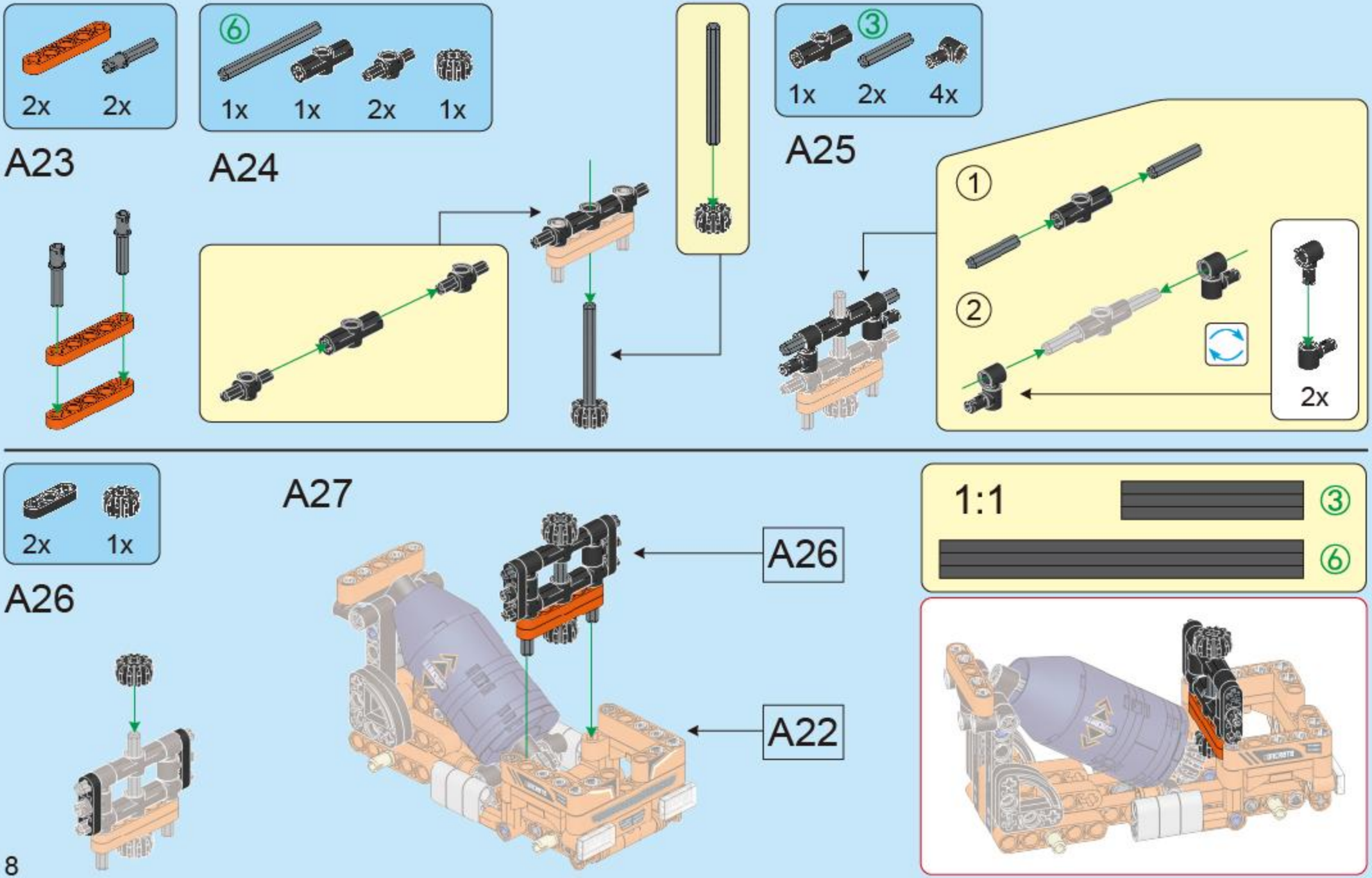
2x
2x
A23
6
1x
1x
2x
1x
A24
3
1x
2x
4x
A25
1
2
2x
2x
1x
A26
A27
A26
A22
1:1
3
6

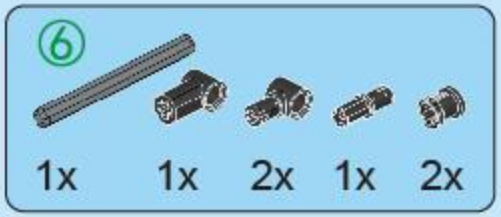

A28

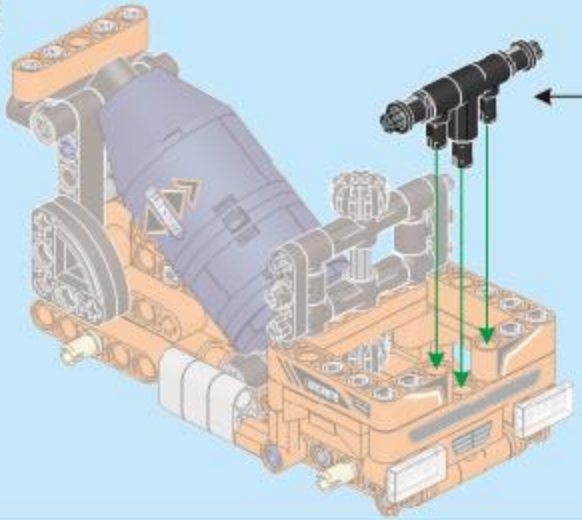

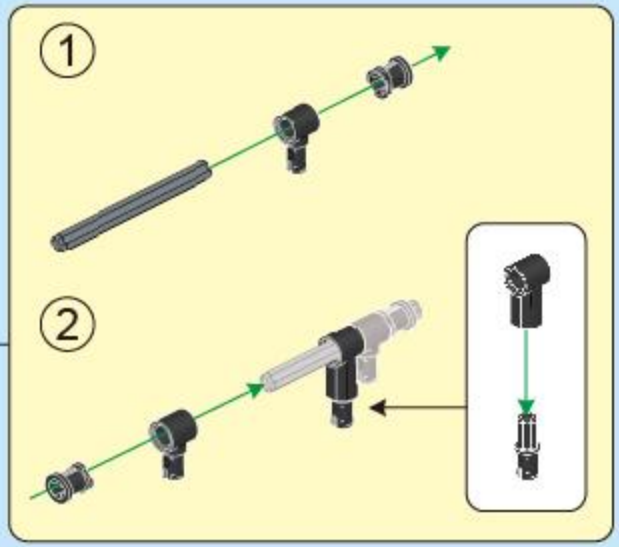

A29

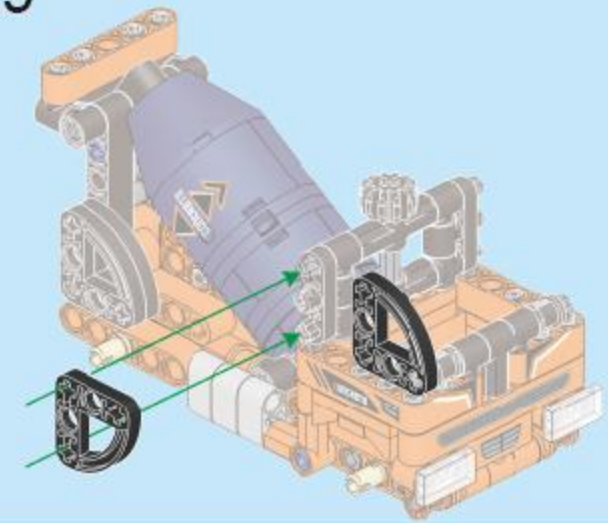

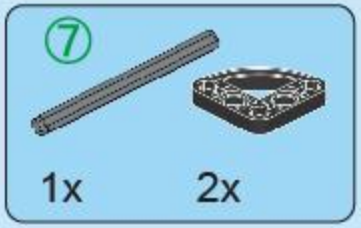

A30

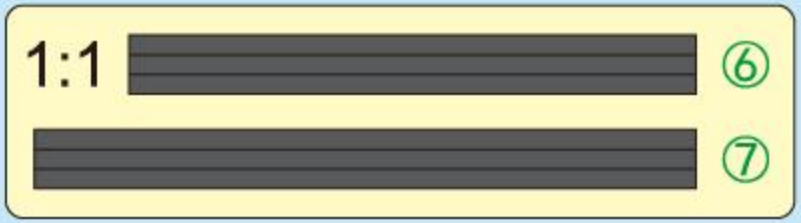

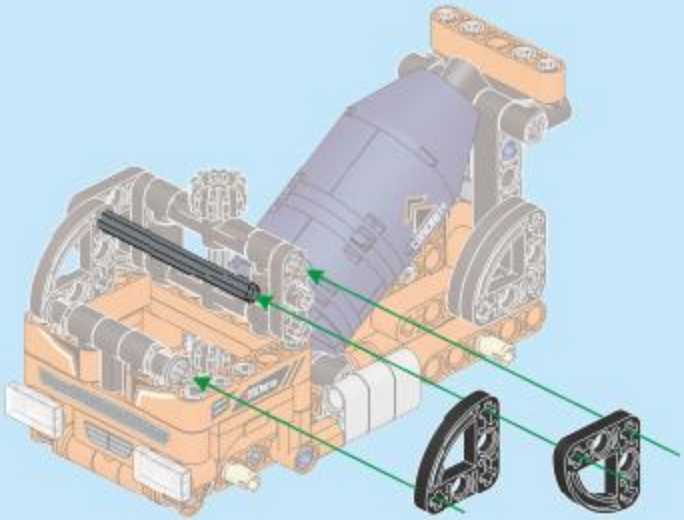

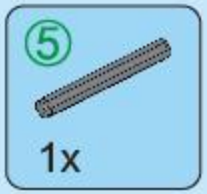

A31

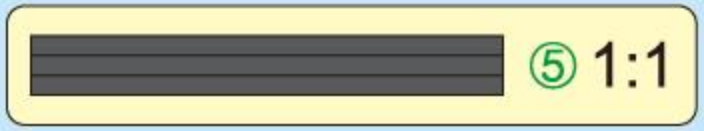

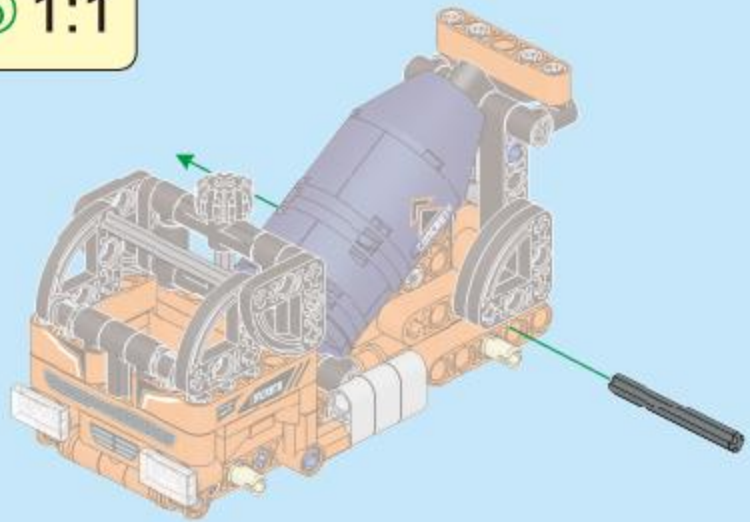

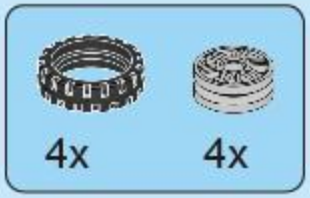

A32

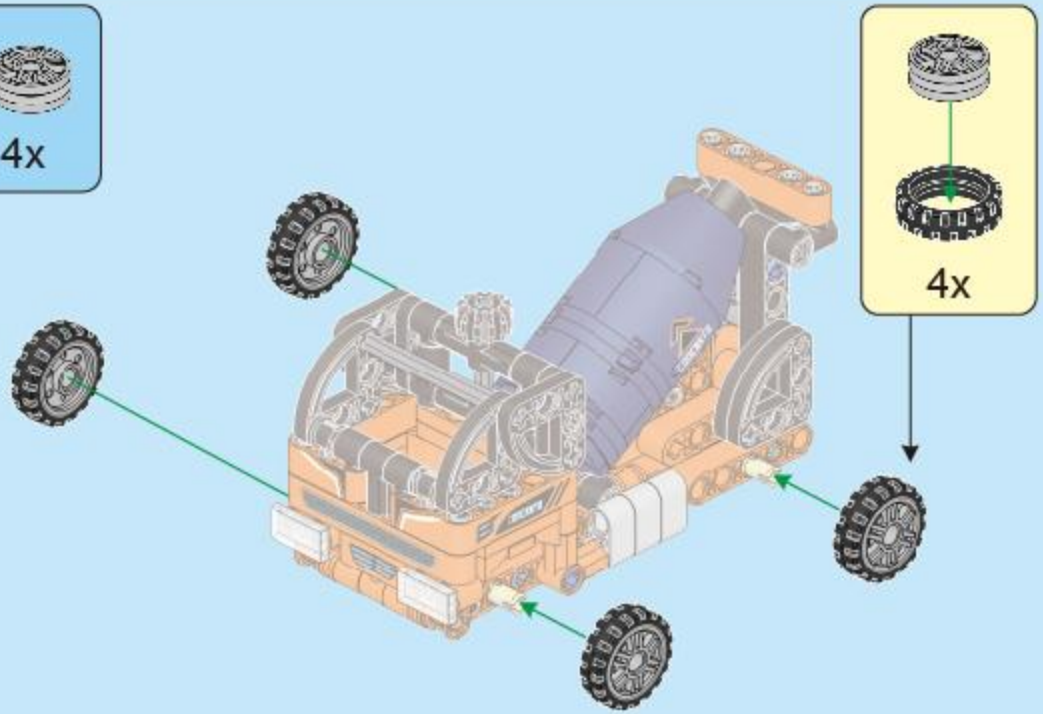

A

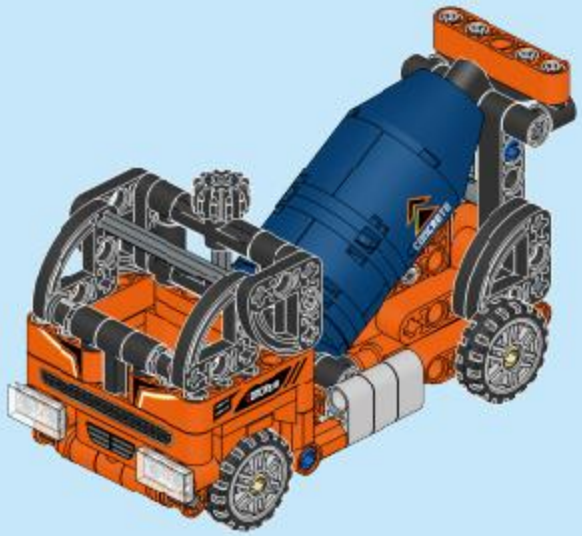

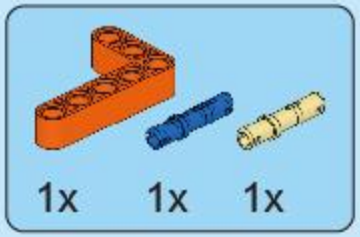

B1

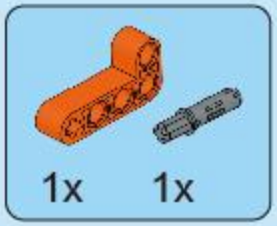

B2

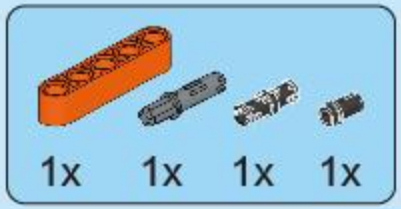

B3

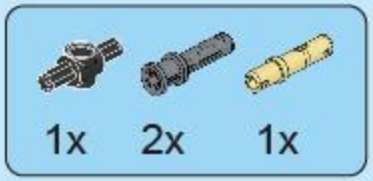

B4

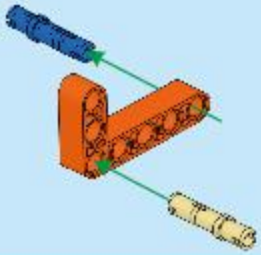

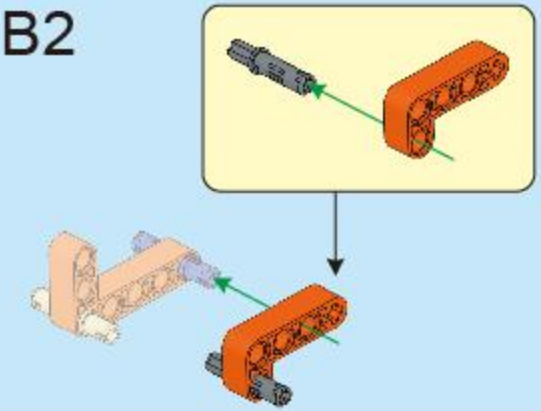

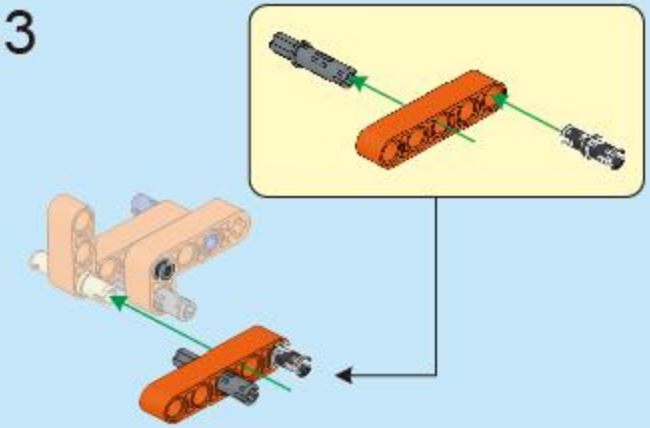

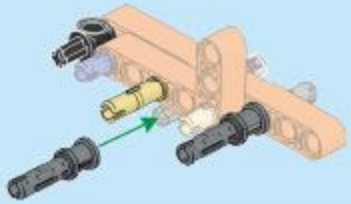

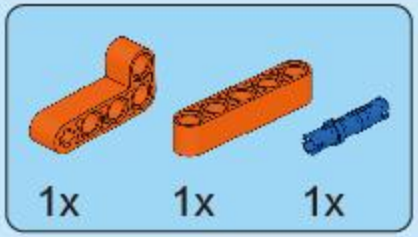

B5

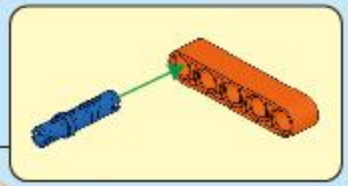

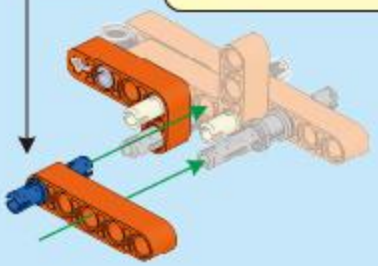

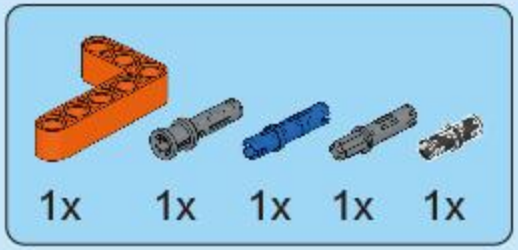

B6

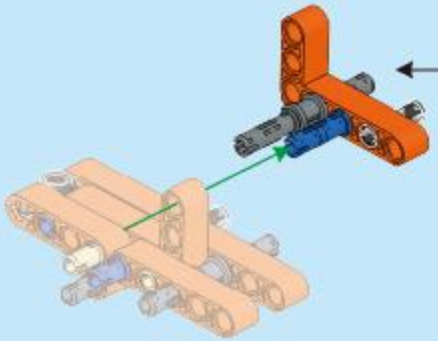

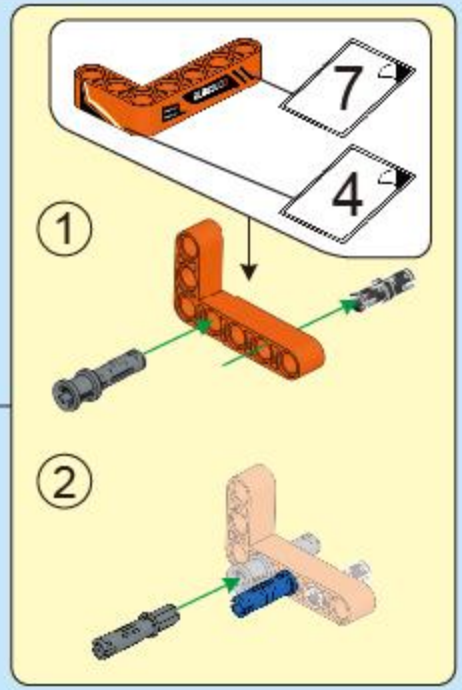

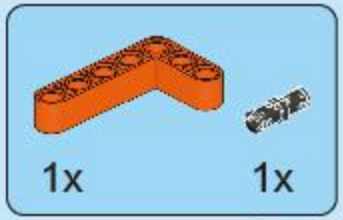

B7

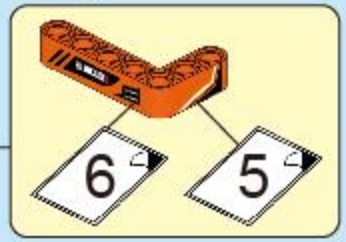

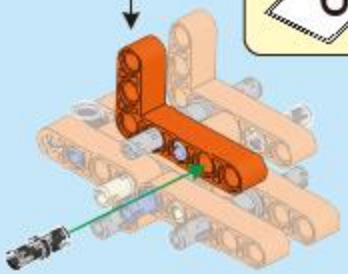

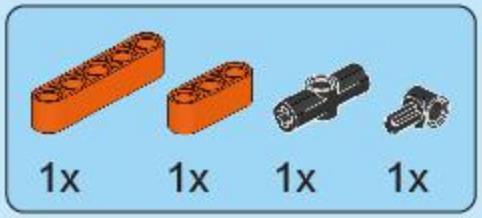

B8

B9

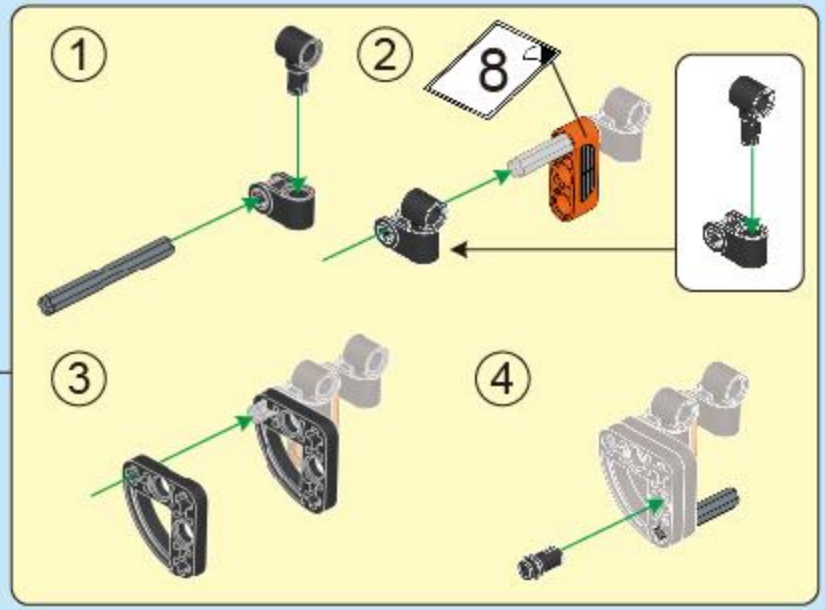

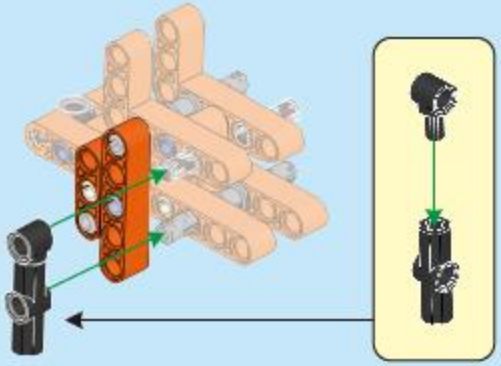

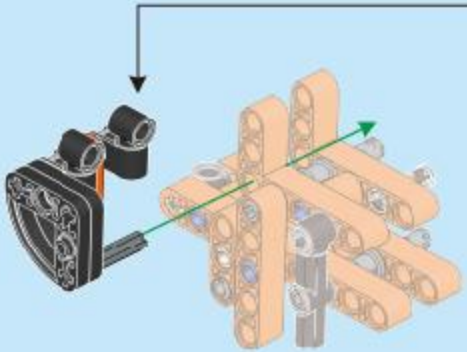

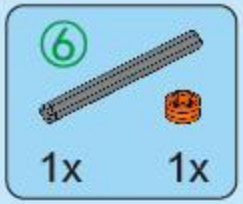

B10

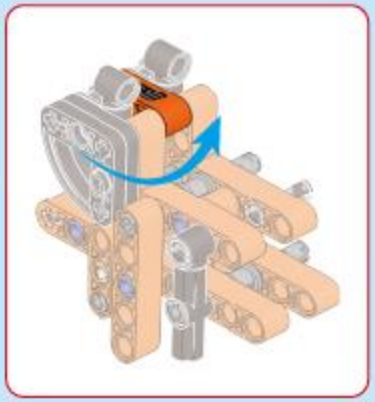

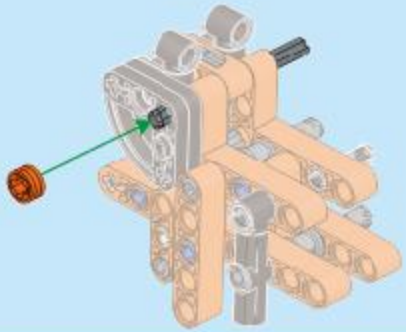

B11

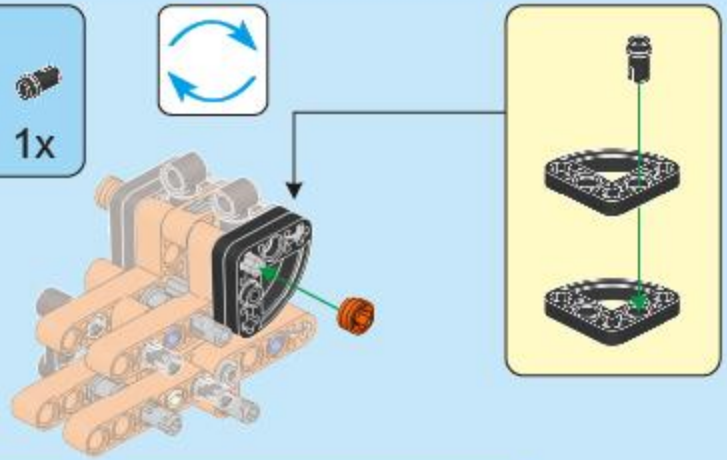

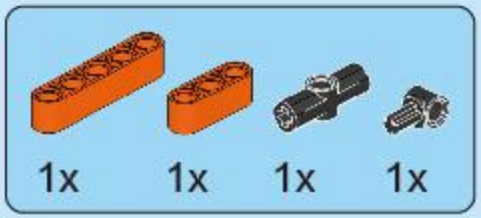

B12

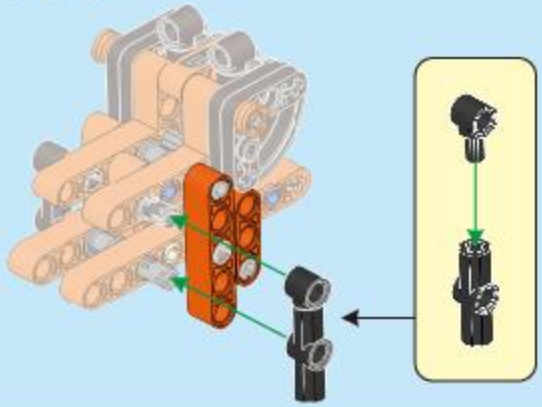

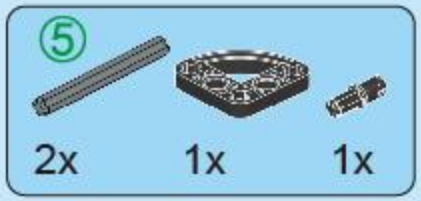

B13

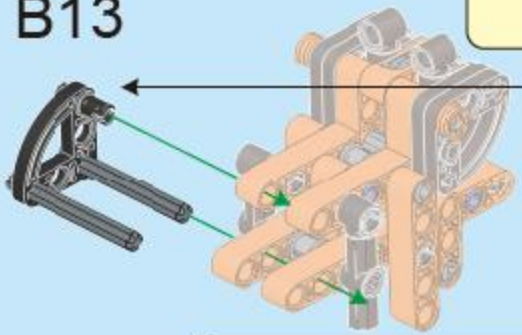

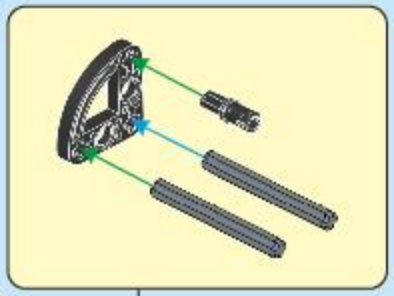

B14

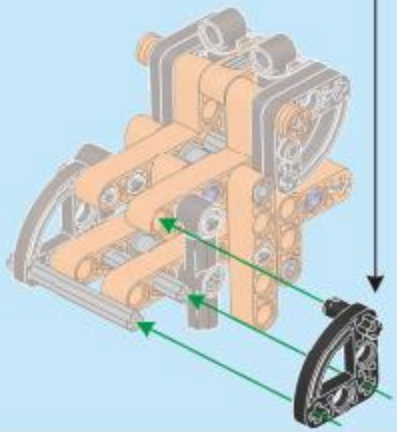

B15

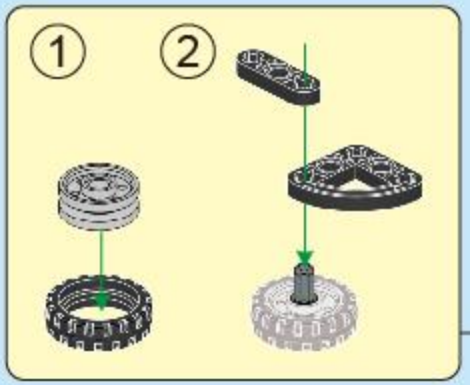

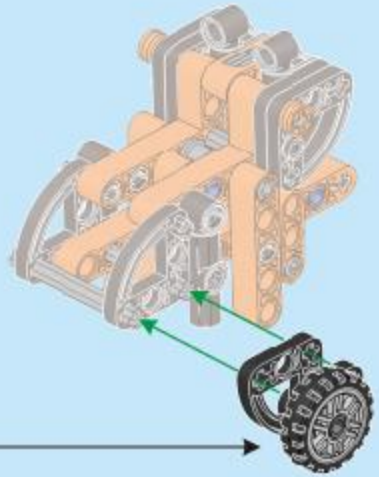

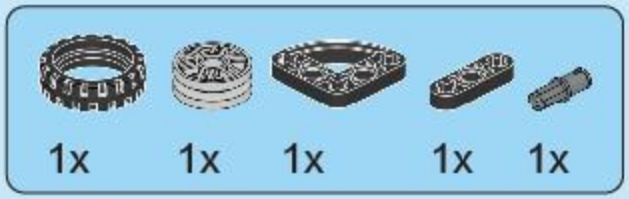

B16

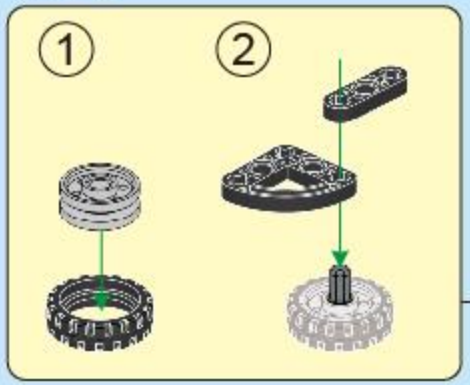

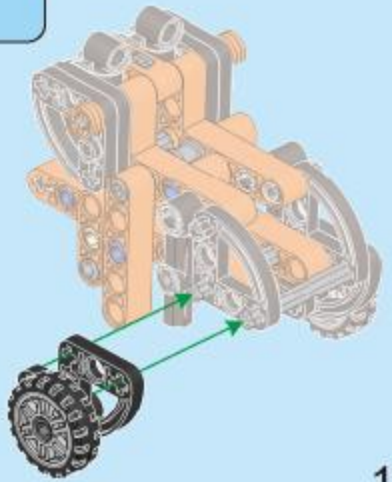

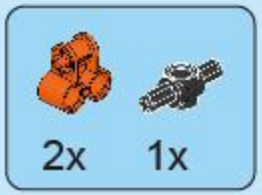

B17

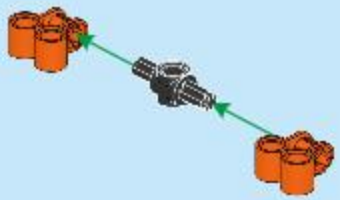

B18

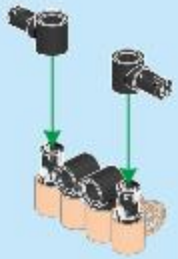

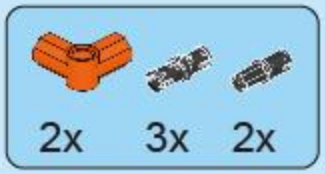

B19

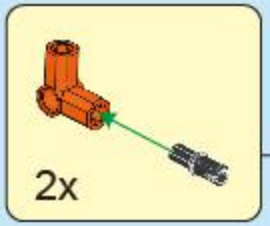

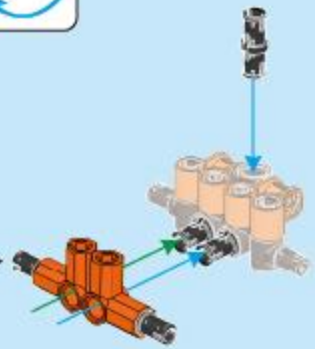

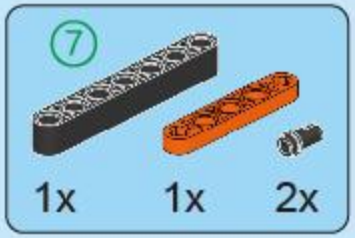

B20

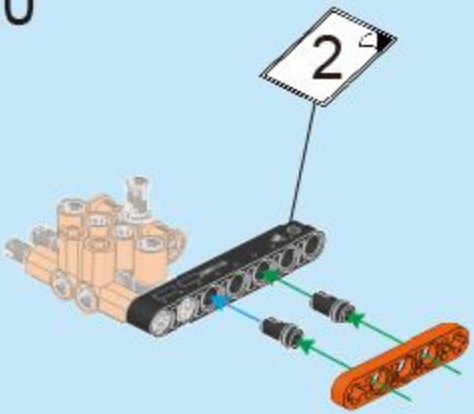

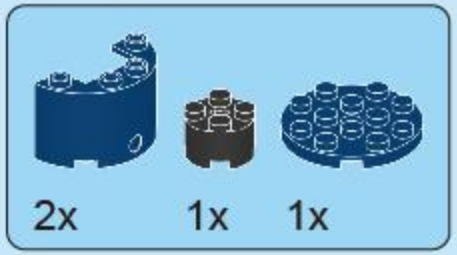

B21

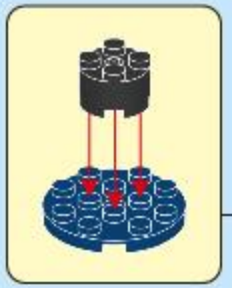

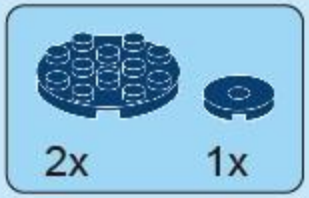

B22

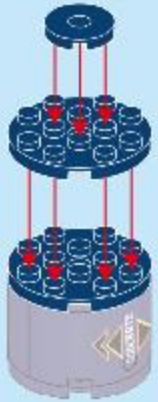

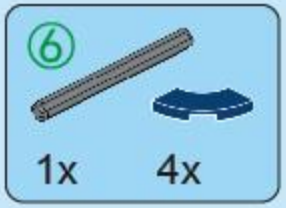

B23

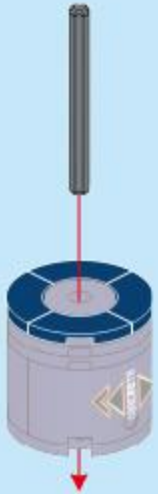

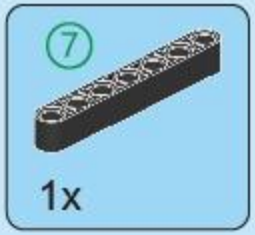

B24

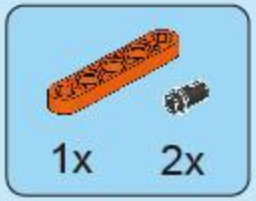

B25

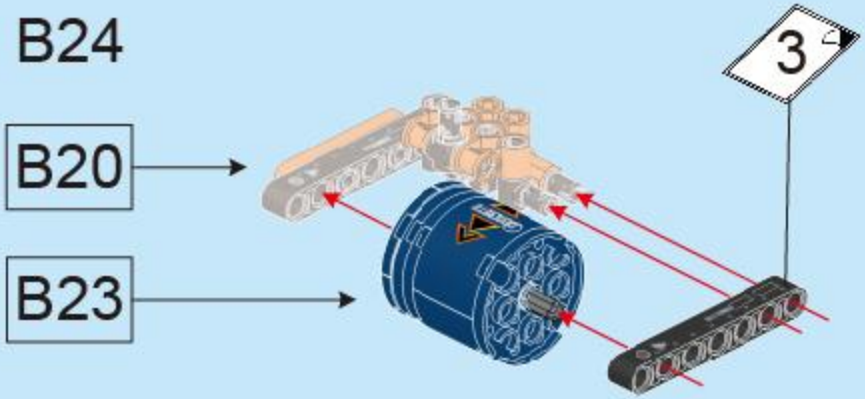

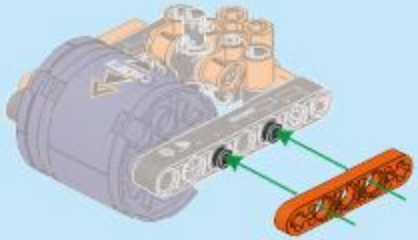

B26

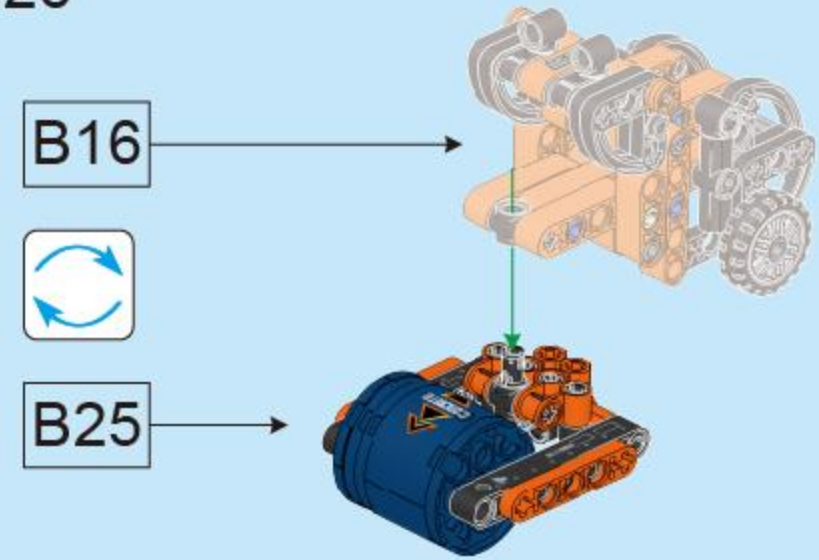

B

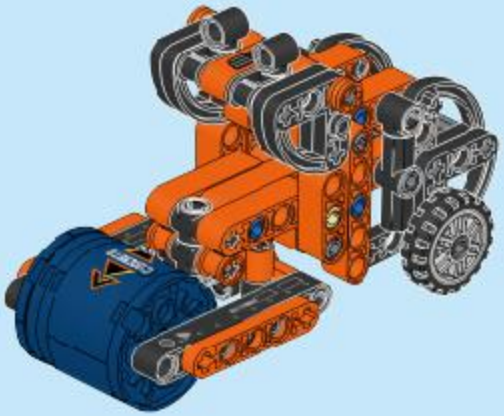

ENGINE-MORPH

2in1